MG-i550

50 HP-CLASS EFI ENGINE

2-Stroke, 550cc



PURPOSE-BUILT FOR ONE-WAY MISSION APPLICATIONS

LIGHTWEIGHT, EFFICIENT, COST-EFFECTIVE

10-YEAR MAINTENANCE-FREE STORAGE LIFE*

EASY INTEGRATION / PLUG-AND-PLAY

INTEGRATED ELECTRICAL POWER GENERATION OPTION

MULTIPLE STARTING SYSTEM OPTIONS

CLUTCH OPTION FOR CANISTER LAUNCH APPLICATIONS

REDUNDANT THROTTLE CONTROL INTERFACE

MONITORING AND DATA LOGGING CAPABILITY

SERVICE SOFTWARE SUPPORT

Tel: +90 (222) 255 50 56 | www.motapower.com | info@motapower.com

Issue Date: 05.09.2026
Rev B

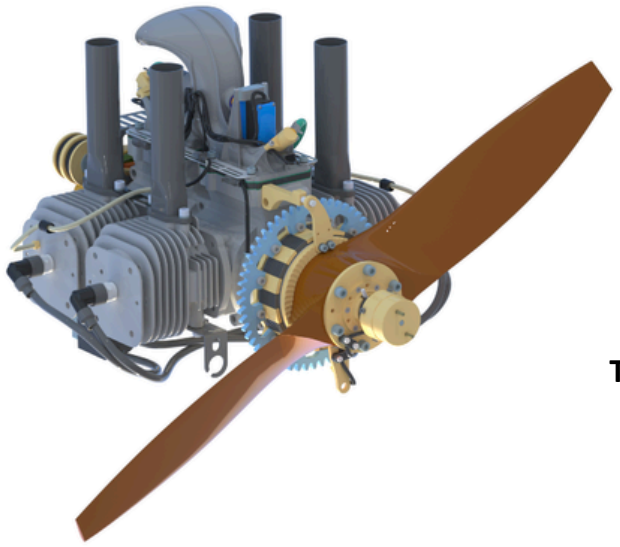

Application Area

- One-Way Misson Applications

General Features

- 2-stroke, 550 cc, 4 Cylinders
- Gasoline Premix (Fuel:Oil Ratio 30:1)
- Electronic fuel injection system (EFI)
- Fully integrated system
  - ECU, sensors, fuel pump, fuel filter
  - Exhaust pipes, propeller, starter
  - Vibration isolators, mounting bracket
  - Alternator, DC voltage regulator
- Single-connector interface
- Easy installation and maintainance
- Weather-resistant & EMI shielded electronics and wiring harness
- Service software support for engine operation, data download, calibration updates and configuration tracking

Technical Specifications

- Maximum Power (7500 rpm) : 50 HP (0 m, ISA)
- Specific Fuel Consumption : 440 g/kWh (Cruise)
- Propeller : 30 / 31 / 32 inch
- Propeller Rotation Direction : CCW
- Electrcical Supply : 12 VDC, 6A
- Electrical Output (>4000 rpm) : 1200 W @28 VDC
- Communication : CAN Protocol
- Service Life : 30 hours
- Maintenance Interval : 10 years*
- Engine Weight : ~17.67 kg
- Optional Clutch Weight : ~2.43 kg
- Optional Starter Weight : ~2.39 kg
- Optional Alternator Weight : ~1.16 kg
- Optional Volt. Reg. Weight : ~0.67 kg
- Optional Propeller Weight : ~0.47 kg

*Annually short run required

Environmental Conditions

- Ambient Temperature : -39 / +55 °C
- Starting Temperature : -32 / +70 °C
- Altitude : -1000 / 20000 ft

Dimensions (mm)

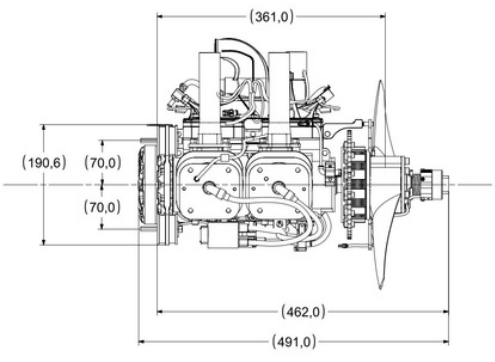

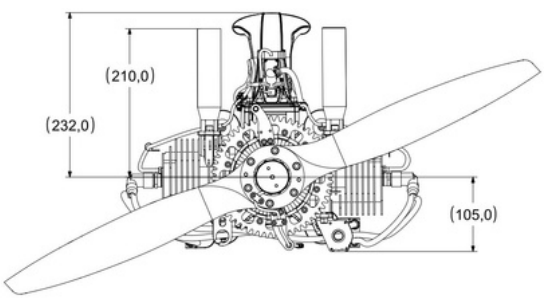

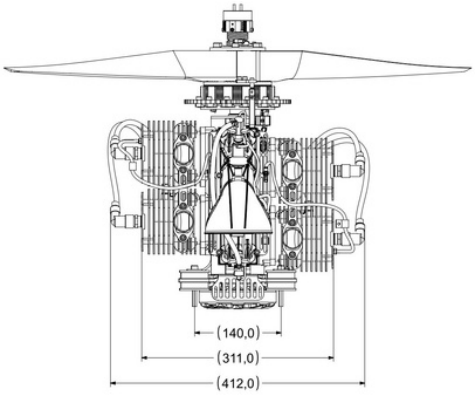

Tel: +90 (222) 255 50 56 | www.motapower.com | info@motapower.com

Issue Date: 05.09.2026
Rev B